Ultrathin Dimming Touch Wheel RF Remote Controller

Model No.: R6, R6-1

1 and 4 zone dimming/Touch brightness wheel/Wireless remote 30m distance/CR2032 battery

Features

- Apply to single color LED controller.
- Ultra sensitive color adjustment touch wheel.
- Each remote can match one or more receiver.
- CR2032 battery powered.
- Operate with LED indicator light.
- White & Black available.



R6

4 Zone Dimming



R6-1

1 Zone Dimming

CE RoHS emc LVD RED

Technical Parameters

Input and Output	
Output signal	RF(2.4GHz)
Working voltage	3VDC(CR2032)
Working current	<5mA
Standby current	<10μA
Standby time	1 year
Remote distance	30m(Barrier-free space)

Safety and EMC	
EMC standard (EMC)	ETSI EN 301 489-1 V2.2.3 ETSI EN 301 489-17 V3.2.4
Safety standard(LVD)	EN 62368-1:2020+A11:2020
Radio Equipment(RED)	ETSI EN 300 328 V2.2.2
Certification	CE,EMC,LVD,RED

Environment	
Operation temperature	Ta: -30°C ~ +55°C
Package	
Size	L114 x W65 x H20mm
Gross weight	0.062kg
Warranty	
Warranty	5 years

Mechanical Structures and Installations

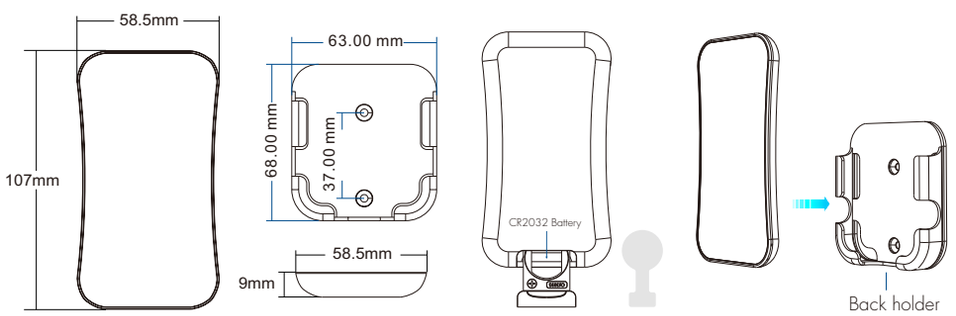

To fix the remote, two options are offered for selection:
Option 1:
fix the remote' back holder on the wall with two screws.
Option 2:
adhere the remote' back holder to the wall with paster.

Note: 1. Before the first use, please remove the protective film on the battery.
2. If the LED indicator is not on when press key, it is due to dead battery or bad contact caused by multiple plugging, please replace the battery, or raise the battery shrapnel with a screwdriver.

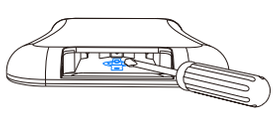

Operation

- When light is on, touch the color wheel, the indicator will display red.
- To extend battery life, no touch or press key operation after a few seconds, the touch wheel will enter sleep state, you need press any key to make touch wheel quit sleep state.

Match Remote Control (two match ways)

End user can choose the suitable match/delete ways. Two options are offered for selection:

Use the controller's Match key

Match:
Short press match key, immediately press on/off key (single zone remote) or zone key (multiple zone remote) of the remote.
The LED indicator fast flash a few times means match is successful.

Delete:
Press and hold match key for 5s to delete all match,
The LED indicator fast flash a few times means all matched remotes were deleted.

Use Power Restart

Match:
Switch off the power, then switch on power, repeat again.
Immediately short press on/off key (single zone remote) or zone key (multiple zone remote) 3 times on the remote.
The light blinks 3 times means match is successful.

Delete:
Switch off the power, then switch on power, repeat again.
Immediately short press on/off key (single zone remote) or zone key (multiple zone remote) 5 times on the remote.
The light blinks 5 times means all matched remotes were deleted.

Key function

● R6 4 zone dimming remote

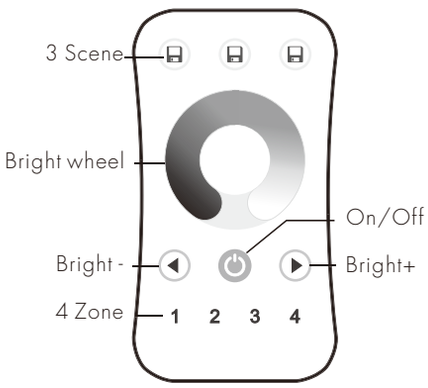

On/Off: Short press turn on/off all zone light.

1,2,3,4 zone: Short press select and turn on zone light, long press 2s turn off zone light.
Short press multiple zone key fastly, will synchronous select multiple zone synchronously.

Bright wheel: Touch to change current zone brightness.

Bright+/-: Adjust brightness for current selected zone,
short press 10 levels, long press 1-6s for continuous 256 levels adjustment.

3 Scene: Short press recall the scene, long press 2s save the current state into the scene.
the LED indicator will light up longer when save OK.
4 zone recall or save synchronously.

The remote can be used as 4 zone dimming remote or single zone 4 channel dimming remote.

On/Off + 4: Long press 2s set as 4 channel dimming remote,
only match with one or multiple receiver of 4 channel, such as V4 or C4 controller.

On/Off + 1: Long press 2s set as 4 zone dimming remote,
each zone match with one or multiple receivers.
When set ok, the red indicator will light on longer.

● R6-1 1 zone dimming remote

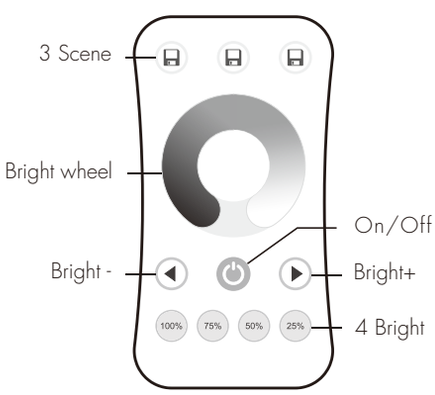

On/Off: Turn on/off light.

Bright wheel: Touch to change brightness.

Bright+/-: Adjust brightness, short press 10 levels, long press 1-6s for continuous
256 levels adjustment.

100%,75%,50%,25%: Get 4 kinds brightness directly.

3 Scene: Brightness memory.
Short press recall the scene, long press 2s save the current brightness into the scene.
the LED indicator will light up longer when save OK.

Safety information

1. Read all instructions carefully before you begin this installation.
2. When installing battery, pay attention to the battery positive and negative polarity.
   A long time without the remote control, remove the battery.
   When remote distance becomes smaller and insensitive, replace the battery.
3. If no response from the receiver, please re-match the remote.
4. Gently handle remote, beware of falling.
5. For indoor and dry location use only.