RT1,RT6,RT8

RF DIM

Dimming Touch Wheel RF Remote Controller

- Apply to single color LED controller.
- Ultra sensitive color adjustment touch wheel.
- Each remote can match one or more receiver.
- AAAx2 battery powered.
- Operate with LED indicator light.

CE RoHS RED



RT1
1 Zone Dimming

RT6
4 Zone Dimming

RT8
8 Zone Dimming

Technical Parameters

Input and Output	
Output signal	RF(2.4GHz)
Working voltage	3VDC(AAAx2)
Working current	<5mA
Standby current	<10μA
Standby time	1 year
Remote distance	30m(Barrier-free space)

Safety and EMC	
EMC standard	ETSI EN 301 489-1 V2.2.3 ETSI EN 301 489-17 V3.2.4
Safety standard	EN 61347-1:2015+A1:2021 EN 61347-2-13:2014+A1:2017
Radio Equipment	ETSI EN 300 328 V2.2.2
Certification	CE RED

Environment	
Operation temperature	Ta: -30 °C ~ +55 °C
Package	
Size	L140 x W60 x H26mm
Gross weight	0.088kg
Warranty	
Warranty	5 years

Mechanical Structures and Installations

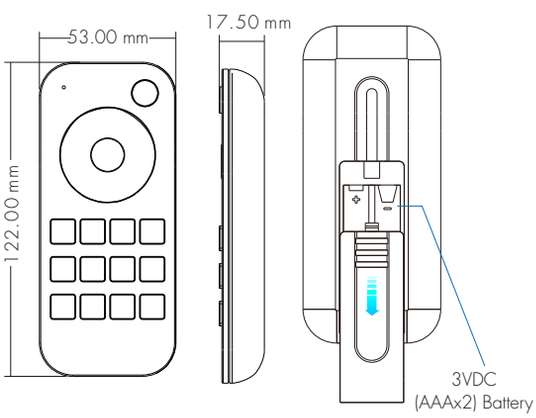

Back holder

Two options are offered for selection, please fix the back holder on the wall with two screws, or adhere the back holder to the wall with paster.

1. Back holder without magnet

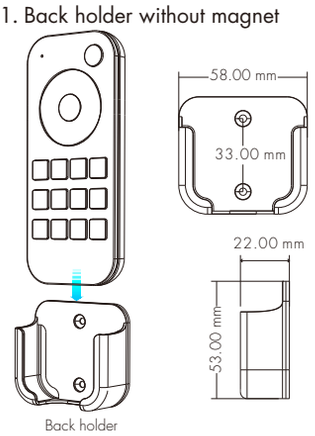

2. Back holder with magnet
(The remote with built-in magnet)

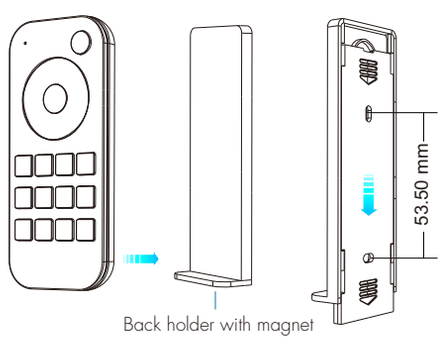

Operation

- When turn on light, the indicator display blue. when turn off light, the indicator display red.
- When touch the color wheel, the indicator will display the same color.
- When press or touch operation is invalid (If the light is off), the indicator display red.
- To extend battery life, no touch or press key operation after a few seconds, the touch wheel will enter sleep state, you need press any key to make touch wheel quit sleep state.

Match Remote Control (two match ways)

End user can choose the suitable match/delete ways. Two options are offered for selection:

Use the controller's Match key

Match:
Short press match key, immediately press on/off key (single zone remote) or zone key (multiple zone remote) of the remote.
The LED indicator fast flash a few times means match is successful.

Delete:
Press and hold match key for 5s to delete all match,
The LED indicator fast flash a few times means all matched remotes were deleted.

Use Power Restart

Match:
Switch off the power, then switch on power, repeat again.
Immediately short press on/off key (single zone remote) or zone key (multiple zone remote) 3 times on the remote.
The light blinks 3 times means match is successful.

Delete:
Switch off the power, then switch on power, repeat again.
Immediately short press on/off key (single zone remote) or zone key (multiple zone remote) 5 times on the remote.
The light blinks 5 times means all matched remotes were deleted.

Key function

- RT1 1 zone dimming remote



: Turn on/off light.

: Touch to change brightness.

: Adjust brightness, short press 10 levels, long press 1-6s for continuous 256 levels adjustment.

: Small night brightness (10%).

: Turn off light after 30s, long press 2s will turn off light after 60s.

: 25%, 50%, 75%,100% brightness.

: Short press recall the scene, long press 2s save current brightness into S1/2/3/4.
the LED indicator display green when save OK.

- RT6 4 zone dimming remote



: Short press turn on/off all zone light.

: Touch to change current zone brightness.

1 2 3 4 : Short press select and turn on zone light, long press 2s turn off zone light.
Short press multiple zone key fastly, will select multiple zone synchronously.

: 25%, 50%, 75%,100% brightness for current selected zone.

S1 S2 S3 S4 : Short press recall the scene, long press 2s save current state into S1/2/3/4.
the LED indicator display green when save OK.
4 zone recall or save synchronously.

The remote can be used as 4 zone dimming remote or single zone 4 channel dimming remote.

On/Off + 4: Long press 2s set as 4 channel dimming remote, only match with one or multiple receiver of 4 channel, such as V4 or C4 controller.

On/Off + 1: Long press 2s set as 4 zone dimming remote, each zone match with one or multiple receivers.

When set ok, the green indicator will light on longer.

- RT8 8 zone dimming remote

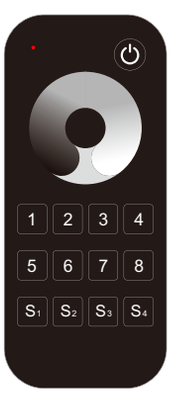

: Short press turn on/off all zone light.

: Touch to change current zone brightness.

1 2 3 4
5 6 7 8 : Short press select and turn on zone light, long press 2s turn off zone light.
Short press multiple zone key fastly, will select multiple zone synchronously.

S1 S2 S3 S4 : Short press recall the scene, long press 2s save current state into S1/2/3/4.
the LED indicator display green when save OK.
8 zone recall or save synchronously.

Safety information

1. Read all instructions carefully before you begin this installation.
2. When installing battery, pay attention to the battery positive and negative polarity.
   A long time without the remote control, remove the battery.
   When remote distance becomes smaller and insensitive, replace the battery.
3. If no response from the receiver, please re-match the remote.
4. Gently handle remote, beware of falling.
5. For indoor and dry location use only.

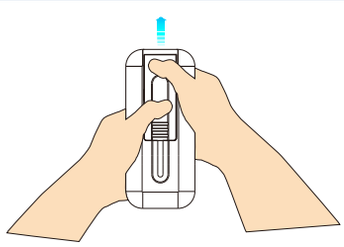

When replacing the batteries,
use both hands to remove the back cover of the remote control.