STRÜHM

PRODUCT INFORMATION SHEET



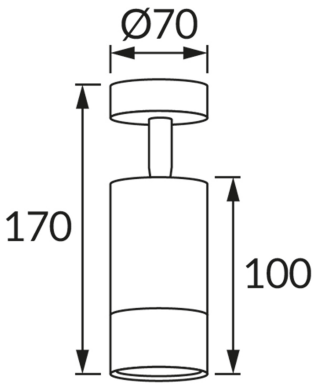

BASIC INFORMATION

Product name:	PUZON SPT GU10 BLACK/GOLDEN
Ideus index:	04276
EAN barcode:	5901477342769
Colour :	Black/gold
Materials:	Aluminium
Height:	170 mm
Width:	70 mm
Depth:	70 mm
Box packaging:	50 pcs

PRODUCT PARAMETERS

Power supply:	220-240V 50/60Hz
Power:	max 35 W
Lampholder type:	GU10
Dedicated light source:	LED
	Possibility of light source replacement
Product offer the possibility of adjusting the illumination direction:	Yes
Electric shock protection class:	1
Degree of protection provided against intrusion dust, accidental contact and water:	IP20
	For indoor use
CE	Declaration of conformity